Course PH410 Course coordinator: Alika Khare

Problem Set _02 Due Date: Jan 27, 2025

Note: Please submit the solutions of at least one of the problems, on Monday, Jan 27, 2025, during the class. The solutions can be submitted in a group of maximum of four students. Name and Roll no. of all the group members should be written clearly on the top. If solutions are found to be reasonably correct then five marks will be awarded and in case of non-submission/wrong solution zero marks.

1. Two infinitely large grounded metallic plates lie in *xz* plane, one at $y=0$ and another one at $y=a$ as shown in figure below. The end at $x=0$ is insulated with both these plates (e.g. separated by an infinitesimally small insulated strips) and maintained at a potential $V_o(y)$. Find the potential in between these two plates.

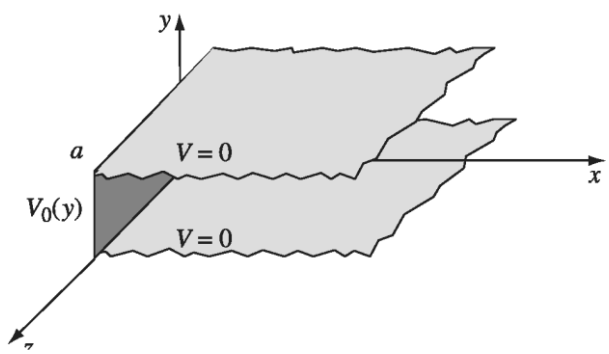

Figure 1

2. In the above problem, If the strip at $x=0$ is a conductor and maintained at constant potential V_o then the obtained the surface charge density $\sigma(y)$ on $x=0$ plate.

3. In the above configuration, Fig 1, if the boundary of the slot $x= 0$ is divided into two parts, with infinitesimally small insulation, $y=0$ to $y=a/2$ kept at a constant potential of V_o, and that of $y=a/2$ to $y=a$, at $-V_o$, Find the potential in between the two parallel plates (with in the slot).

4. A cubical box of side a consists of five metal plates (excluding the top plate at $z=a$) joint together and kept at zero potential. The top plate at $z=a$ (metallic) is maintained at a constant potential V_o. Find the potential inside the box and then calculate the potential in the center of the box.

PH410: ELECTRODYNAMICS-I
Tutorial 2: Potentials

---

1. Two infinitely large grounded metallic plates lie in xz plane, one at $y = 0$ and another one at $y = a$ as shown in figure below. The end at $x = 0$ is insulated with both these plates (e.g. separated by an infinitesimally small insulated strips) and maintained at a potential $V_0(y)$. Find the potential in between these two plates.

Solution:

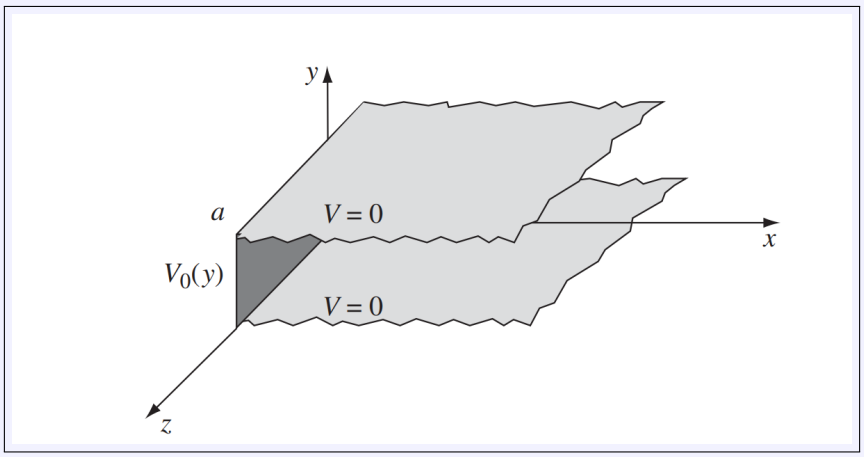

Figure 1: Diagram of the grounded metallic plates setup.

Laplace equation in 3D is given as:

$$\nabla^2 V = 0$$

But this particular configuration is independent of z-axis, therefore the problem reduced to 2D,

$$\frac{\partial^2 V}{\partial x^2} + \frac{\partial^2 V}{\partial y^2} = 0$$

Boundary conditions are:

(i) $y = 0, V(x, 0) = 0$

(ii) $y = a, V(x, a) = 0$

(iii) $x = 0, V(0, y) = V_0(y)$

(iv) $x \to \infty, V \to 0$

Using separation of variables,
Let $V(x, y) = V_1(x)V_2(y)$
Then the equation becomes,

$$\frac{1}{V_1}\frac{\partial^2 V_1}{\partial x^2} + \frac{1}{V_2}\frac{\partial^2 V_2}{\partial y^2} = 0$$

For this to be true both should equal some constant say k^2,

$$\frac{1}{V_1}\frac{\partial^2 V_1}{\partial x^2} = -\frac{1}{V_2}\frac{\partial^2 V_2}{\partial y^2} = k^2$$

The equation is then separated into two parts,

$$\frac{1}{V_1}\frac{\partial^2 V_1}{\partial x^2} = k^2 \text{ and } \frac{1}{V_2}\frac{\partial^2 V_2}{\partial y^2} = -k^2$$

The solutions are:

$$V_1(x) = Ae^{-kx} + Be^{kx} \text{ and } V_2(y) = C\sin kx + D\cos kx$$

1. From the 4th boundary condition, the term e^{kx} will blow up, therefore $B = 0$.

$$V_1(x) = A_n e^{-k_n x}$$

2. From the The 1st boundary condition, $D = 0$,

$$V_2(y) = C\sin ky$$

3. From the 2nd boundary condition,

$$0 = C\sin ka$$

But $C \neq 0$

$$ka = n\pi \implies k_n = \frac{n\pi}{a} \qquad (n = 0, 1, 2, 3...)$$
$$\therefore V_2(y) = C_n \sin k_n y$$

The solution is then given by:

$$V(x, y) = \sum_{n=1}^{\infty} A_n e^{-k_n x}(C_n \sin k_n y)$$

C_n can be absorb within A_n,

$$\therefore V(x, y) = \sum_{n=1}^{\infty} A_n e^{-k_n x} \sin k_n y$$

From the 3rd boundary condition,

$$V(0, y) = V_0(y) = \sum_{n=1}^{\infty} A_n \sin k_n y$$

Using Fourier trick as stated in Griffiths' Book, we multiply both sides using $\sin k_m y$ and integrating from 0 to a, then,

$$\int_0^a V_0(y) \sin k_m y dy = \sum_{n=1}^{\infty} A_n \int_0^a \sin k_n y \sin k_m y dy$$

$$\int_0^a V_0(y)\sin\left(\frac{m\pi}{a}y\right)dy = \sum_{n=1}^{\infty} A_n \int_0^a \sin\left(\frac{n\pi}{a}y\right)\sin\left(\frac{m\pi}{a}y\right)dy$$

Here,

$$\int_0^a \sin\left(\frac{n\pi}{a}y\right)\sin\left(\frac{m\pi}{a}y\right)dy = \begin{cases} 0, & \text{if } n \neq m \\ \frac{a}{2}, & \text{if } n = m \end{cases}$$

So the term where $n \neq m$ are all dropped out, therefore,

$$\begin{aligned} A_n &= \frac{2V_0(y)}{a}\int_0^a \sin\left(\frac{n\pi}{a}y\right)dy \\ &= \frac{2V_0}{n\pi}(1-\cos n\pi) = \begin{cases} 0, & \text{if } n \text{ is even,} \\ \frac{4V_0}{n\pi}, & \text{if } n \text{ is odd.} \end{cases} \end{aligned}$$

$$\therefore V(x,y) = \frac{4V_0}{\pi}\sum_{n=1,3,5\ldots}\frac{1}{n}e^{-n\pi x/a}\sin\left(\frac{n\pi}{a}y\right)$$

2. In the above problem, If the strip at $x = 0$ is a conductor and maintained at constant potential V_0 then the obtained the surface charge density $\sigma(y)$ on $x = 0$ plate.

Solution:
The surface charge density can be found out from the following expression:

$$\left(\frac{\partial V_{oustide}}{\partial x} - \frac{\partial V_{inside}}{\partial x}\right)\bigg|_{x=0} = -\frac{\sigma}{\epsilon_0}$$

Since, $V_{outside} = 0$, we get,

$$\sigma(y) = -\epsilon_0\left(\frac{\partial V}{\partial x}\right)\bigg|_{x=0}$$

Where $\dfrac{\partial V}{\partial x}$ is the normal derivative of the potential at the conducting surface.

The potential in the region $x > 0$ is given by:

$$V(x,y) = \frac{4V_0}{\pi}\sum_{n=1,3,5\ldots}\frac{1}{n}e^{-n\pi x/a}\sin\left(\frac{n\pi}{a}y\right)$$

Taking a partial derivative *w.r.t* x,

$$\begin{aligned} \frac{\partial V}{\partial x} &= \sum_{\text{odd } n}\frac{4V_0}{n\pi}\left(-\frac{n\pi}{a}e^{-n\pi x/a}\right)\sin\left(\frac{n\pi y}{a}\right) \\ &= -\sum_{\text{odd } n}\frac{4V_0}{a}e^{-n\pi x/a}\sin\left(\frac{n\pi y}{a}\right) \end{aligned}$$

At $x = 0$,

$$\frac{\partial V}{\partial x}\bigg|_{x=0} = -\sum_{\text{odd } n}\frac{4V_0}{a}\sin\left(\frac{n\pi y}{a}\right)$$

$$\sigma(y) = \epsilon_0 \sum_{\text{odd } n} \frac{4V_0}{a} \sin\left(\frac{n\pi y}{a}\right)$$

3. In the above configuration, Fig 1, if the boundary of the slot $x = 0$ is divided into two parts, with infinitesimally small insulation, $y = 0$ to $y = a/2$ kept at a constant potential of V_0, and that of $y = a/2$ to $y = a$, at $-V_0$, Find the potential in between the two parallel plates (with in the slot).

Solution:
We have already solved the Laplace equation for the given figure, we found the two solutions *i.e.,*

$$V_1(x) = Ae^{-kx} + Be^{kx} \text{ and } V_2(y) = C\sin kx + D\cos kx$$

The boundary conditions still hold except no. 3, which is updated as follows:

$$V(0,y) = \begin{cases} V_0 & \text{for } 0 \le y \le a/2 \\ -V_0 & \text{for } a/2 \le y \le a \end{cases}$$

After applying the boundary conditions, we get the solution given as,

$$V(x,y) = \sum_{n=1}^{\infty} A_n e^{-k_n x} \sin k_n y$$

At $x = 0$,

$$V(0,y) = \sum_{n=1}^{\infty} A_n \sin\left(\frac{n\pi}{a} y\right)$$

The coefficient can be evaluated as,

$$A_n = \frac{2}{a} \int_0^a V(0,y) \sin\left(\frac{n\pi y}{a}\right) dy$$

Using the new boundary conditions:

$$A_n = \frac{2}{a}\left[\int_0^{a/2} V_0 \sin\left(\frac{n\pi y}{a}\right) dy + \int_{a/2}^{a} (-V_0) \sin\left(\frac{n\pi y}{a}\right) dy\right].$$

Evaluating these integrals:

$$\begin{aligned} A_n &= \frac{2V_0}{a}\left[\frac{-a}{n\pi}\cos\left(\frac{n\pi}{a}y\right)\Big|_0^{a/2} - \left(\frac{-a}{n\pi}\right)\cos\left(\frac{n\pi}{a}y\right)\Big|_{a/2}^{a}\right]. \\ &= \frac{2V_0}{n\pi}\left[-\left(\cos\left(\frac{n\pi}{2}\right) - \cos 0\right) + \cos(n\pi) - \cos\left(\frac{n\pi}{2}\right)\right]. \\ &= \frac{2V_0}{n\pi}\left[-2\cos\left(\frac{n\pi}{2}\right) + 1 - (-1)^n\right] \end{aligned}$$

$$A_n = \begin{cases} \frac{8V_0}{n\pi} & \text{for } n = 2, 6, 10, ... \\ 0, & \text{otherwise} \end{cases}$$

The potential is then given by:

$$V(x, y) = \frac{8V_0}{\pi} \sum_{n=2,6,10,...}^{\infty} \frac{1}{n} e^{-n\pi x/a} \sin\left(\frac{n\pi}{a} y\right)$$

4. A cubical box of side a consists of five metal plates (excluding the top plate at $z = a$) joint together and kept at zero potential. The top plate at $z = a$ (metallic) is maintained at a constant potential V_0. Find the potential inside the box and then calculate the potential in the center of the box.

Solution:

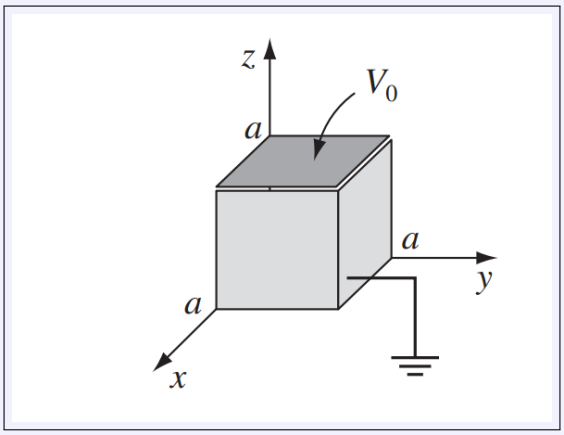

Figure 2: Diagram of the grounded metallic cubical box.

Laplace equation in 3D

$$\frac{\partial^2 V}{\partial x^2} + \frac{\partial^2 V}{\partial y^2} + \frac{\partial^2 V}{\partial z^2} = 0$$

The boundary conditions are :

(i) $x = 0$, $V(0, y, z) = 0$

(ii) $x = 0$, $V(a, y, z) = 0$

(iii) $y = 0$, $V(x, 0, z) = 0$

(iv) $y = 0$, $V(x, a, z) = 0$

(v) $z = 0$, $V(x, y, 0) = 0$

(vi) $z = a$, $V(x, y, a) = V_0$

Let the solution be,

$$V(x,y,z) = V_1(x)V_2(y), V_3(z)$$

Laplace equation become,

$$\frac{1}{V_1}\frac{\partial^2 V_1}{\partial x^2} + \frac{1}{V_2}\frac{\partial^2 V_2}{\partial y^2} + \frac{1}{V_3}\frac{\partial^2 V_3}{\partial z^2} = 0$$

Using separation of variables,

$$\frac{1}{V_1}\frac{\partial^2 V_1}{\partial x^2} = -k^2; \quad \frac{1}{V_2}\frac{\partial^2 V_2}{\partial y^2} = -l^2; \quad \frac{1}{V_3}\frac{\partial^2 V_3}{\partial z^2} = k^2 + l^2$$

Solving this we get:

$V_1(x) = A\sin kx + B\cos kx; \quad V_2(y) = C\sin ly + D\cos ly; \quad V_3(z) = Ee^{\sqrt{k^2+l^2}z} + Ge^{-\sqrt{k^2+l^2}z}$

1. From the first and secondary boundary conditions, $B = 0$, and

$$k_n = \frac{n\pi}{a}$$

2. From the third and fourth $D = 0$, and

$$l_n = \frac{m\pi}{a}$$

3. From the third boundary condition, $E + G = 0$.

$$V_3(z) = E\left(e^{\sqrt{k_n^2+l_n^2}z} - e^{-\sqrt{k_n^2+l_n^2}z}\right) = 2E\left(e^{\left(\pi\sqrt{n^2+m^2}z/a\right)} - e^{\left(\pi\sqrt{n^2+m^2}z/a\right)}\right)$$

$$\therefore V_3(z) = 2E\sinh\left(\pi\sqrt{n^2+m^2}z\right)$$

The solution is

$$V(x,y,z) = \sum_{n=1}^{\infty}\sum_{m=1}^{\infty} A_{n,m}\sin(n\pi x/a)\sin(m\pi y/a)\sinh\left(\pi\sqrt{n^2+m^2}z/a\right)$$

Using the fifth boundary condition:

$$V_0 = \sum_{n=1}^{\infty}\sum_{m=1}^{\infty} C_{n,m}\sin(n\pi x/a)\sin(m\pi y/a)\sinh\left(\pi\sqrt{n^2+m^2}\right)$$

The coefficient is given by

$$\sum_{n=1}^{\infty}\sum_{m=1}^{\infty} A_{n,m}\sinh\left(\pi\sqrt{n^2+m^2}\right)\int_0^a\int_0^a \sin(n\pi x/a)\sin(n'\pi x/a)\sin(m\pi y/a)sin(m'\pi y/a)dxdy$$

$$= V_0\int_0^a\int_0^a \sin(n'\pi x/a)\sin(m'\pi y/a)dxdy$$

The integral evavluated as

$$\int_0^a \int_0^a \sin(n\pi x/a)\sin(n'\pi x/a)\sin(m\pi y/a)sin(m'\pi y/a)dxdy = \begin{cases} \left(\frac{a}{2}\right)^2, & \text{if } n = n', m = m' \\ 0, & \text{if } n \neq n', m \neq m' \end{cases}$$

$$A_{n,m}\sinh\left(\pi\sqrt{n^2+m^2}\right)\left(\frac{a}{2}\right)^2 = V_0 \int_0^a \int_0^a \sin(n'\pi x/a)\sin(m'\pi x/a)dxdy$$

We will use drop n', m' and use n, m for simplicity.

$$A_{n,m}\sinh\left(\pi\sqrt{n^2+m^2}\right) = \left(\frac{2}{a}\right)^2 V_0 \int_0^a \int_0^a \sin(n\pi x/a)\sin(m\pi y/a)dxdy = \begin{cases} 0, & \text{if } n \text{ or } m \text{ is even} \\ \frac{16V_0}{\pi^2 nm}, & \text{if both are odd} \end{cases}$$

$$\therefore V(x,y,z) = \frac{16V_0}{\pi^2} \sum_{n=1,3,5,\ldots} \sum_{n=1,3,5,\ldots} \frac{1}{nm}\sin(n\pi x/a)\sin(m\pi y/a)\frac{\sinh\left(\pi\sqrt{n^2+m^2}z/a\right)}{\sinh\left(\pi\sqrt{n^2+m^2}\right)}$$

We have solved the potential only for one face of the cube, at $z = a$ since other faces are grounded. In order to find the potential at the center of the cube, let us consider a superposition of six identical cubes with potential V_0 on one of each faces. Evidently the potential at the center is $V_0/6$.
To prove this further, let solve the potential at $x = y = z = a/2$.

$$\begin{aligned} V(a/2,a/2,a/2) &= \frac{16V_0}{\pi^2} \sum_{n=1,3,5,\ldots} \sum_{n=1,3,5,\ldots} \frac{1}{nm}\sin(n\pi/2)\sin(m\pi/2)\frac{\sinh\left(\pi\sqrt{n^2+m^2}/2\right)}{\sinh\left(\pi\sqrt{n^2+m^2}\right)} \\ &= \frac{16V_0}{\pi^2} \sum_{n=1,3,5,\ldots} \sum_{n=1,3,5,\ldots} \frac{1}{nm}(-1)^{\frac{n-1}{2}}(-1)^{\frac{m-1}{2}}\frac{\sinh\left(\pi\sqrt{n^2+m^2}/2\right)}{\sinh\left(\pi\sqrt{n^2+m^2}\right)} \end{aligned}$$

Let $n \equiv 2i+1$, $m \equiv 2j+1$, then,

$$V(a/2,a/2,a/2) = \frac{16V_0}{\pi^2} \sum_{n=1,3,5,\ldots} \sum_{n=1,3,5,\ldots} \frac{1}{(2i+1)(2j+1)}(-1)^i(-1)^j\frac{\sinh\left(\pi\sqrt{n^2+m^2}/2\right)}{\sinh\left(\pi\sqrt{n^2+m^2}\right)}$$

From trigonometric identities,

$$\sinh\left(\pi\sqrt{n^2+m^2}\right) = 2\sinh\left(\pi\sqrt{n^2+m^2}/a\right)\cosh\left(\pi\sqrt{n^2+m^2}/a\right)$$

$$V = \frac{16V_0}{\pi^2}\cdot\frac{1}{2}\sum_{i=0}^{\infty}\sum_{j=0}^{\infty}\frac{(-1)^{i+j}}{(2i+1)(2j+1)}\operatorname{sech}\left(\pi\sqrt{(2i+1)^2+(2j+1)^2}/2\right)$$

The sum can be evaluated as,

$$S = \frac{1}{2}\sum_{i=0}^{\infty}\sum_{j=0}^{\infty}\frac{1}{(2i+1)(2j+1)}(-1)^{i+j}\operatorname{sech}\left(\pi\sqrt{(2i+1)^2+(2j+1)^2}/2\right)$$

Solving this in Mathematica upto 100 terms, we get $S \approx 0.1028083792$ which is close enough to the value of $\pi^2/96$. Therefore we can conclude that the potential at the center of the cube is indeed $V_0/6$.